HB-4 HOT-COLD HOSEBIB IN TRASH ROOM

WOODFORD

Anti-Siphon Wall Faucets

Model 24/B24/Y24

The Model 24 and B24 are anti-siphon, vacuum breaker protected wall faucets designed for irrigation purposes in mild climate areas. The Model B24 is enclosed in a flush mounted wall box. Both models are designed to blend with modern architecture for installation on or in homes, service stations, churches, motels, drive-in restaurants, etc. The Model Y24 is designed to be used on a stand pipe in the lawn and garden, etc.

SPECIFICATIONS:

VACUUM BREAKER - ANTI-SIPHON:

- NIDEL® Model 34HF with ¾ inch male hose thread
- ASSE Standard 1011 approved
- IAPMO® listed
- Canadian Standards Association

EPDM PACKING: Prevents leaking.

PACKING NUT: Adjustable brass nut with deep stem guard.

VALVE SEAT: Standard "O" size washer.

HANDLES: Furnished with polycarbonate wheel handle and loose tee key.
Optional: Metal wheel handle.

INLETS: Model 24 as shown below.
Model B24: 24P- ½ or 24P ¾ only.
Model Y24: ¾ " FPT.

MAX PRESSURE: 125 p.s.i.

MAX TEMPERATURE: 120° F

SHIPPING WEIGHT: (per unit)
MODEL 24 & Y24: 1 lb
MODEL B24: 13 lbs (brass or chrome box)
6 lbs (aluminum box)

Inlet Descriptions

MODEL 24/B24
P-½ Inlet
½" FPT
P-¾ Inlet
¾" FPT

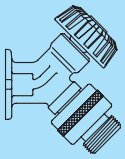

MODEL 24 ONLY
CP Inlet
COMBINATION
½" COPPER TUBE
½" MPT

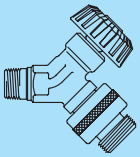

MODEL 24 ONLY
C Inlet
COMBINATION
½" COPPER TUBE
¾" COPPER TUBE

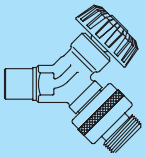

For Installation / Troubleshooting Instructions go to www.woodfordmfg.com or call 1-800-621-6032

MODEL 24

Exterior Finish:
Standard - Chrome (CH)
Optional- Rough Brass (BR) or Polished Chrome (PC)

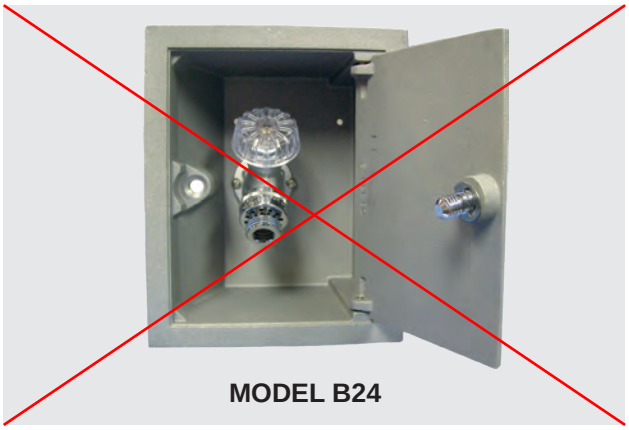

MODEL B24

Exterior Finish:
Standard - Chrome (CH)
Optional- Rough Brass (BR) or Polished Brass (PB)
Other Options: Anodized Aluminum Box (AL)

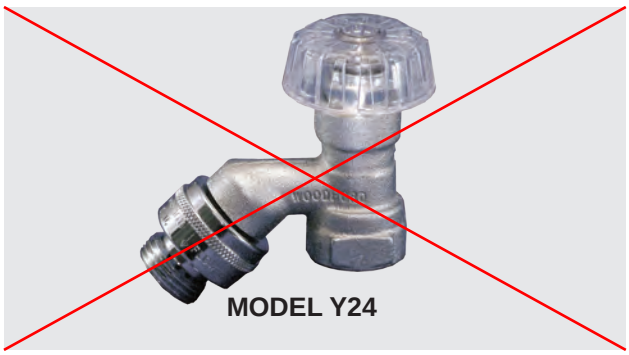

MODEL Y24

Exterior Finish:
Standard - Chrome (CH)
Optional- Rough Brass (BR) or Polished Chrome (PC)

©2011 WOODFORD Mfg. 1972

HB-4 HOT-COLD HOSEBIB IN TRASH ROOM

WOODFORD®

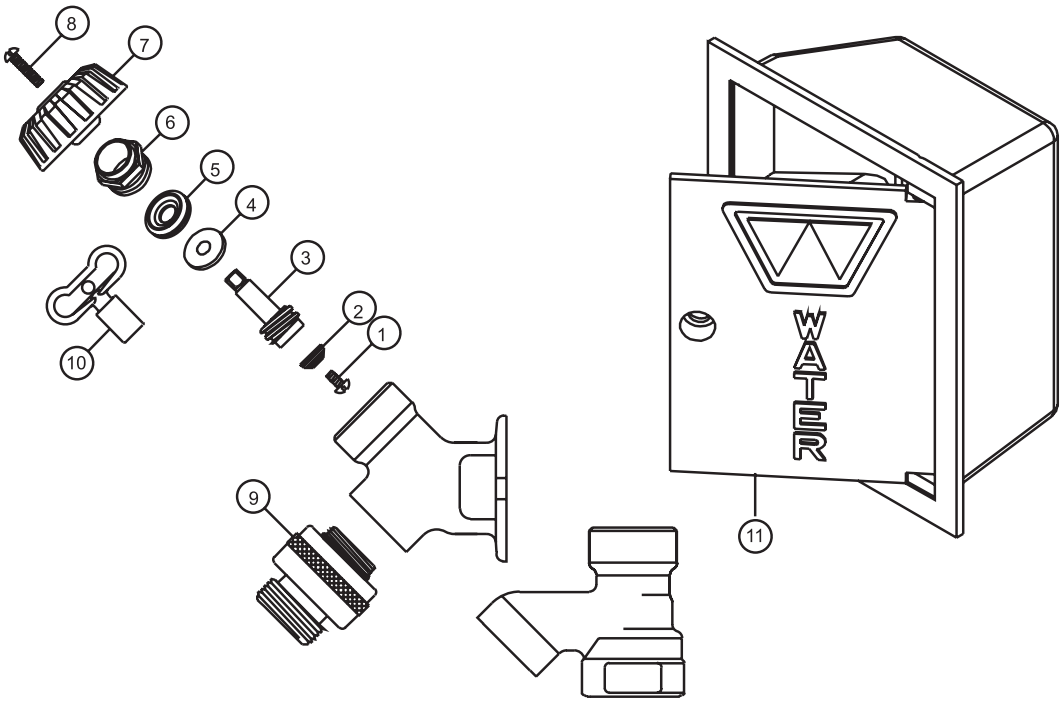

MODEL 24/B24/Y24 PARTS LIST

ITEM	PART#	DESCRIPTION
1	30009	Washer Screw
2	30008	Washer
3	30104	Operating Stem
4	30105	Packing Support Washer
5	30247	EPDM Packing
6	30109	Packing Nut - Chrome
	30107	Packing Nut - Brass
7	30120	Wheel Handle - Clear
	30233	Wheel Handle - Tan
8	30121	Handle Screw - Nickel
	30002	Handle Screw - Brass
9	34HF-CH	34HF Vacuum Breaker - Chrome
	34HF-BR	34HF Vacuum Breaker - Brass
10	50009	Tee Key
11	B24BX	Box/Door Assembly - Chrome
	B24BX-BR	Box/Door Assembly - Brass
	B24BX-PB	Box/Door Assembly - Polished Brass
	B24BX-AL	Box/Door Assembly - Anodized Aluminum
	RK-24	Chrome Repair Kit (Includes items 1-8)
	RK-H34	Brass Repair Kit (Includes items 1-8)

MODEL B24
Rough-In Dimensions

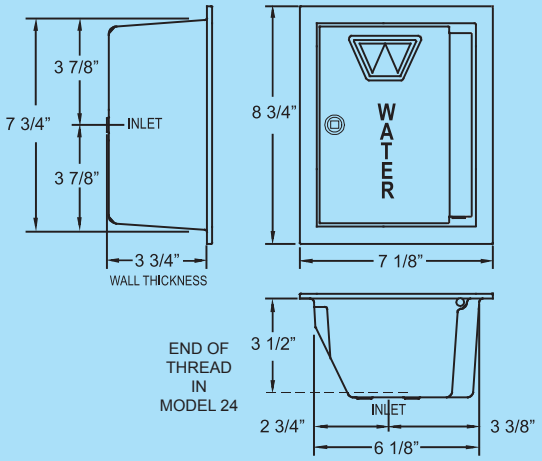

Manufactured under one or more of the following patents: U.S. Patents: 3,414,001; 3,543,786; 4,178,956; 4,316,481; D216,790; D216,791; D277,365; D277,366; Canada Patents: 822,458; 852,529; 865,995

For more information contact...

WOODFORD MANUFACTURING COMPANY

2121 Waynoka Road, Colorado Springs, Colorado 80915 • **Phone:** (800) 621-6032 • **Fax:** (800) 765-4115

To view our complete product line visit: ***www.woodfordmfg.com*** *or email:* ***sales@woodfordmfg.com***

A Division Of WCM Industries, Inc.

HB-4 HOT-COLD HOSEBIB IN TRASH ROOM

www.lawlervalve.com

DATA SHEET

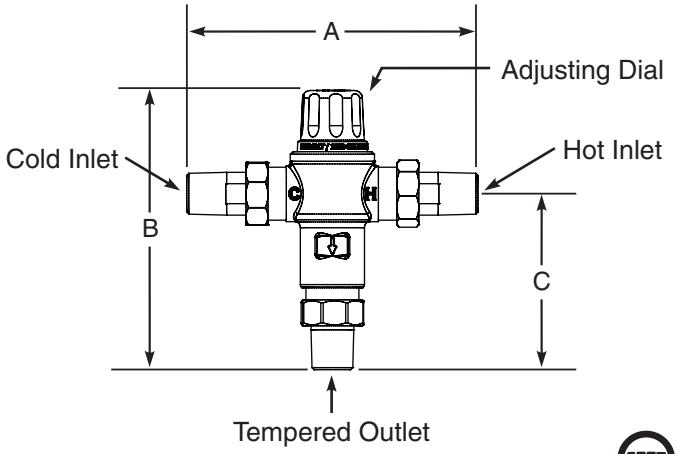

Thermostatic Mixing Valve for Point of Use and Master Controlled Fixtures

Model 570 Lead Free Unit No. 86821

Inlets & Outlet are 1/2″ MNPT

ASSE 1069 & 1070 Approved

Certified to CSA B125.3

ASSE Lead Free Certified

The point of use master controller valve shall be a nickel plated thermostatic mixing valve. The mixing valve shall be 1/2″ MNPT. The mixing valve shall have a spindle to adjust outlet temperature. The mixing valve shall have internal checks. The mixing valve shall be Lawler model 570.

Specifications

- Outlet temperature range: 95-115°F (35-46°C).
- Temperature, hot supply: 180°F max (91°C).
- Temperature, cold supply: 40-80°F (4-27°C).
- Temperature stability (nominal): ±5°F (±3°C).
- Temperature differential (between hot supply and outlet temperature): 10°F (11°C).
- Hydrostatic pressure: 125 psi max (1000 kPa).
- Permitted supply pressure variation: ±20%.
- Flow rate @ 45psi pressure loss: 9 gpm (66L/min).
- Flow rate, minimum: 0.5 gpm (4L/min).
- Flow rate, maximum: 10 gpm (76L/min).

Benefits

- Protects against scalding and chilling.
- Offers choice of temperature settings from 95° through 115°F.
- Easy installation.
- Backed by Lawler's One Year Warranty.
- ASSE 1069 & 1070 approved.

Engineer Approval ☐

LAWLER
MANUFACTURING CO., INC.
5330 East 25th Street
Indianapolis, Indiana 46218
Phone (317) 261-1212
Fax (317) 261-1208

DIMENSIONS:

Valve Number	A	B	C
M 570	5.7″	5.5″	3.5″

FLOW CAPACITIES - MODEL 570

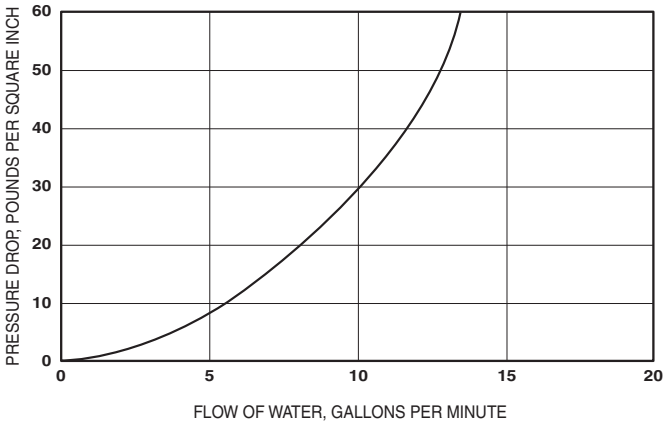

CAPACITIES – MODEL 570

Pressure Drop PSI	5	10	20	40
Valve Number	Capacity			
570-GPM	4	6	7	8.5
570-LPM	15	23	26	32

Temperature Adjustment

To adjust the mixed outlet temperature of the valve, remove the cap to gain access to the adjusting spindle. The spindle should be rotated-clockwise to reduce the temperature, counter-clockwise to increase the temperature until the desired set point is reached.

Note: For ASSE 1069 & 1070 applications.

Design and specification subject to change without notice.